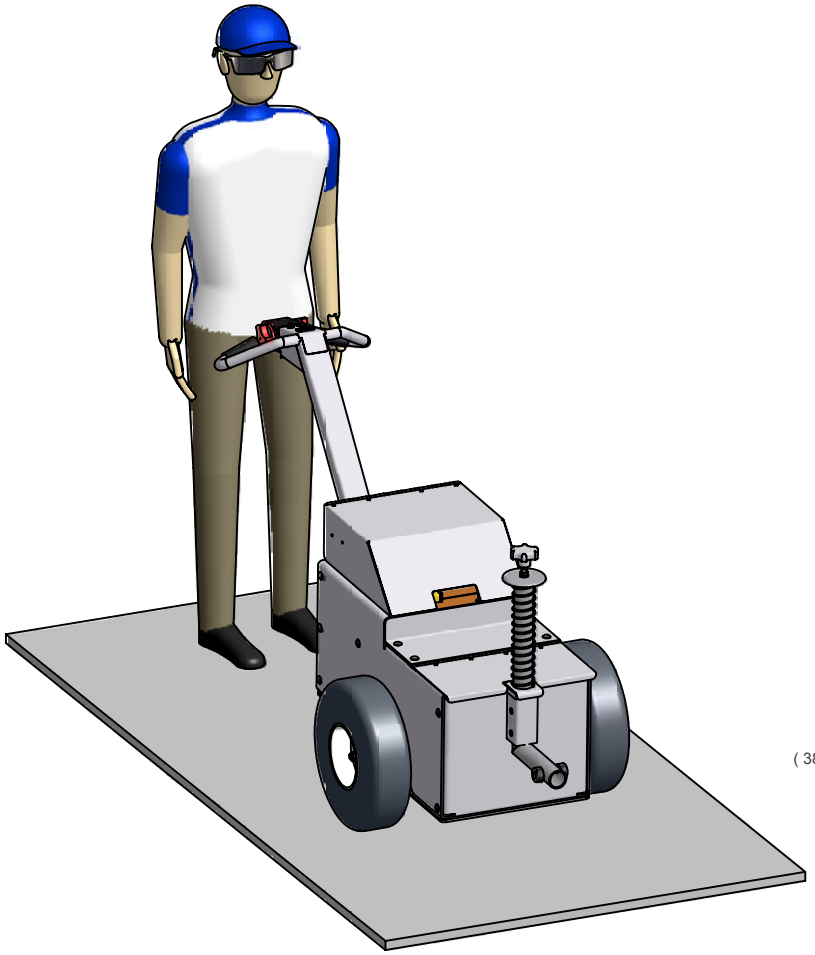

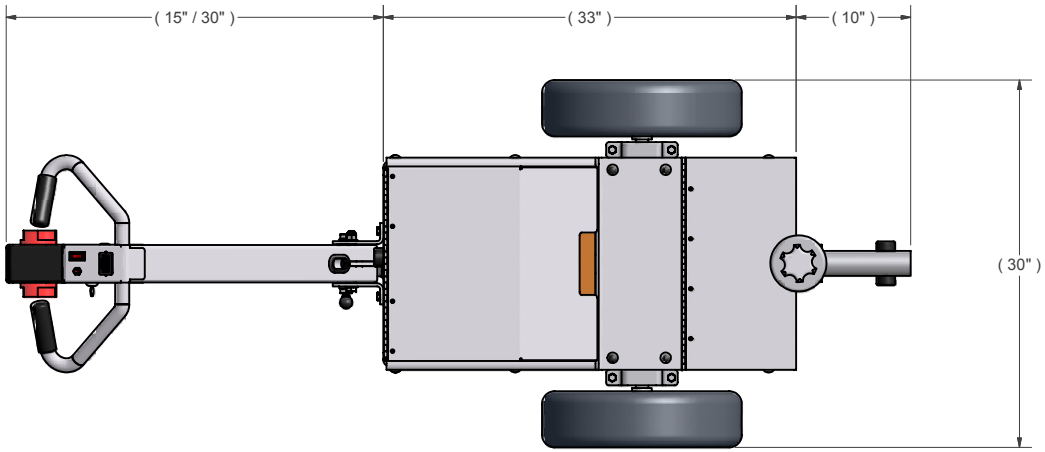

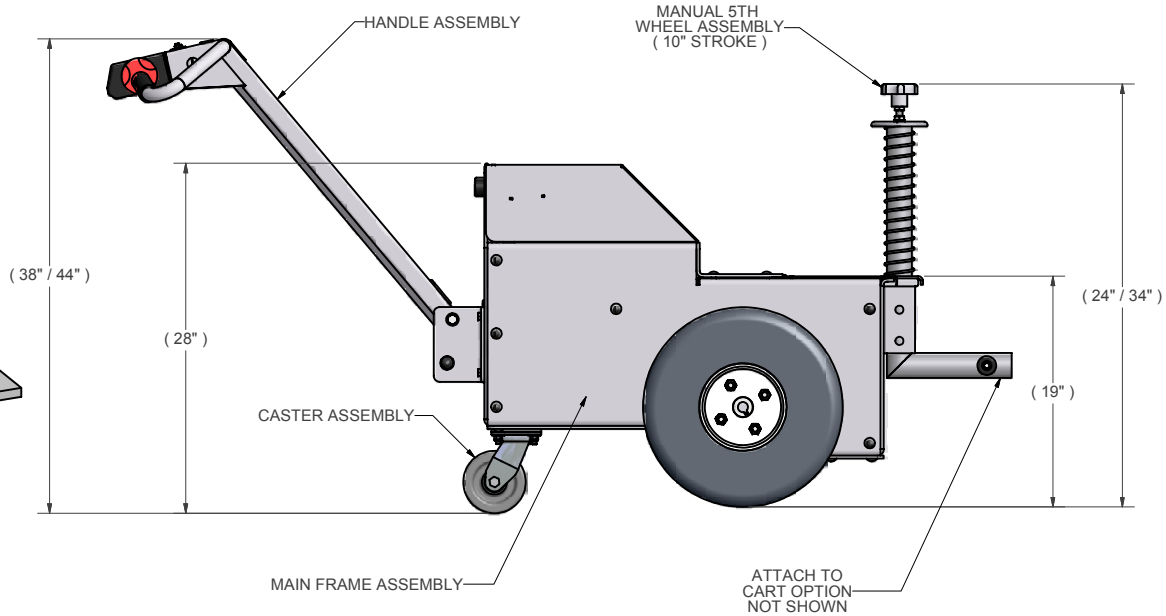

LOAD MOVER INC

TITLE
XTRA w/ SPRING 5TH WHEEL

DRAWING
LM0001-003CD